Installation manual

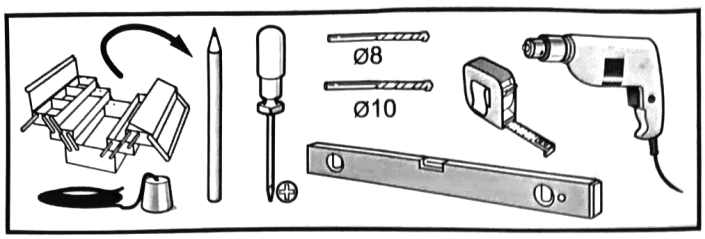

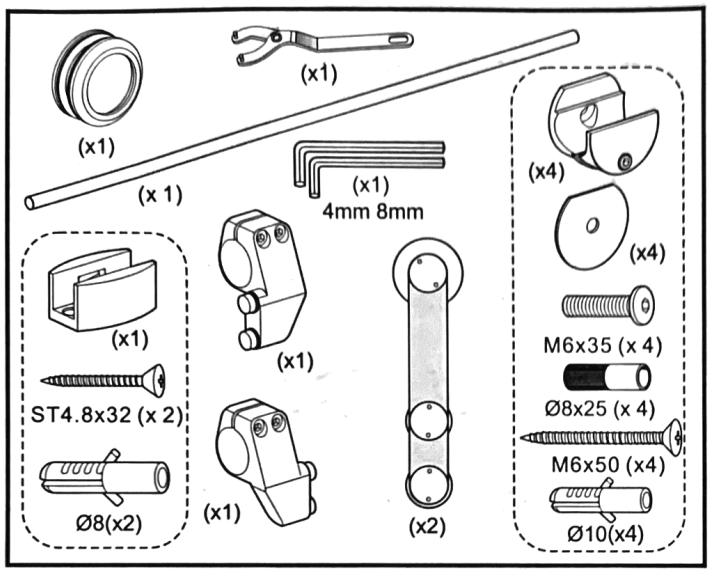

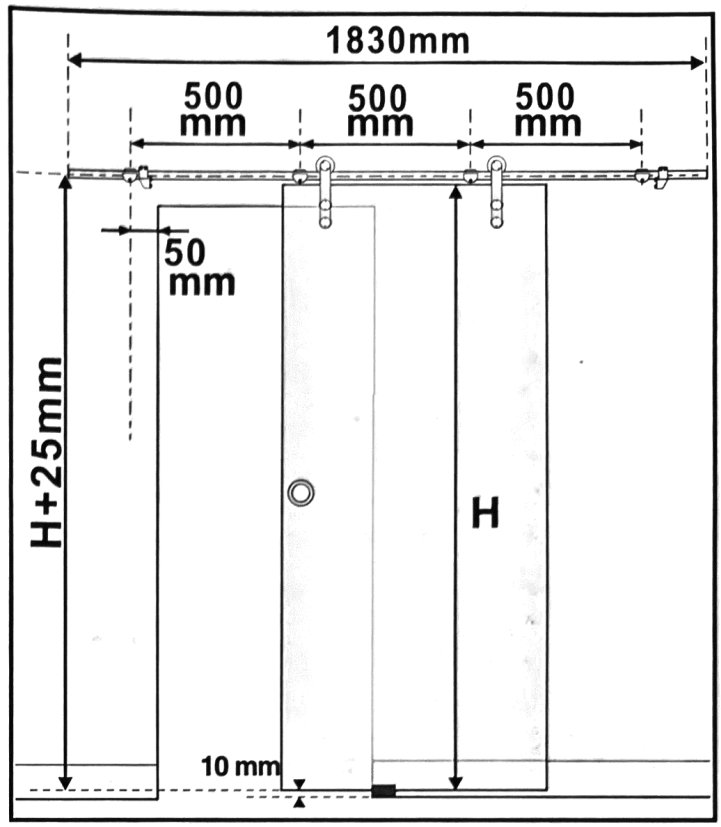

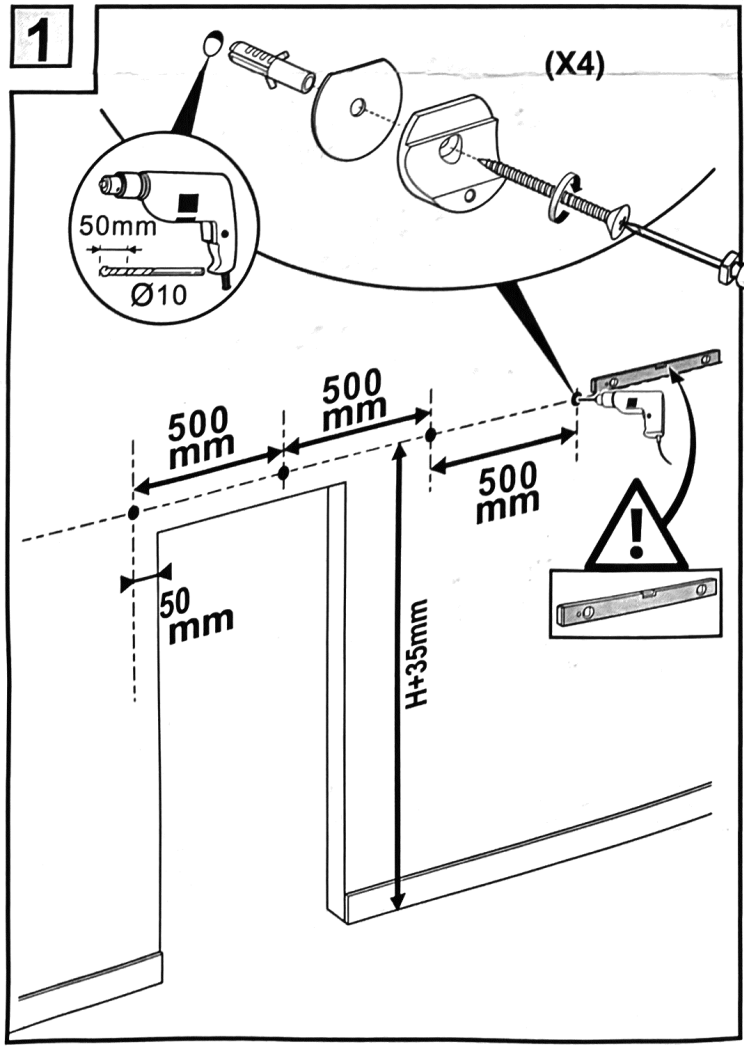

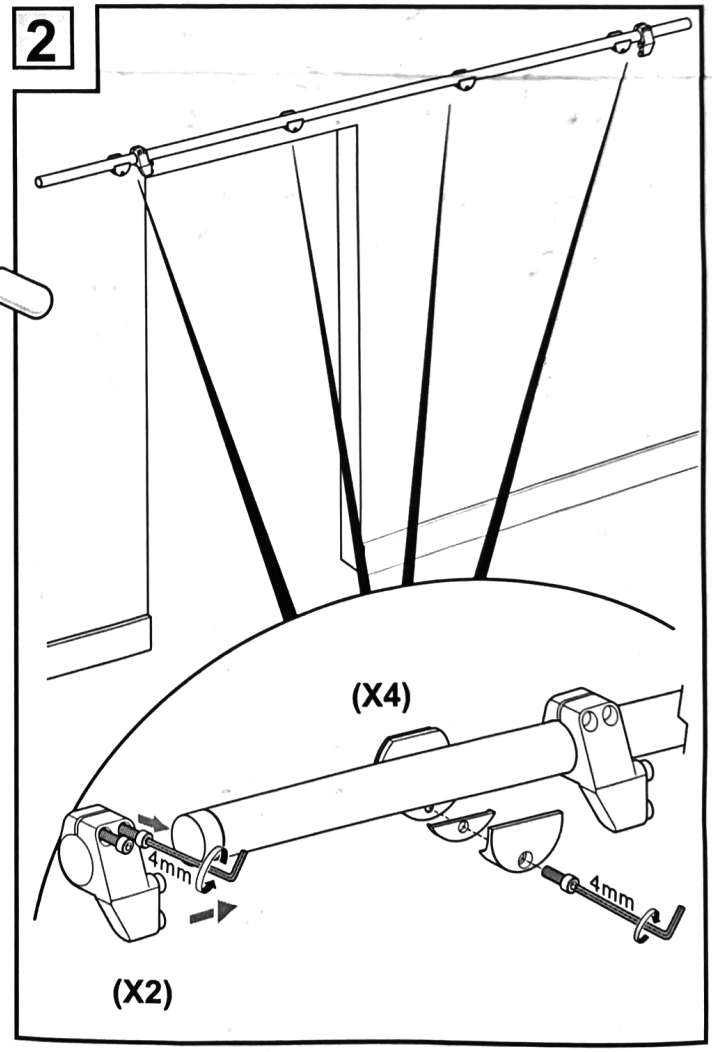

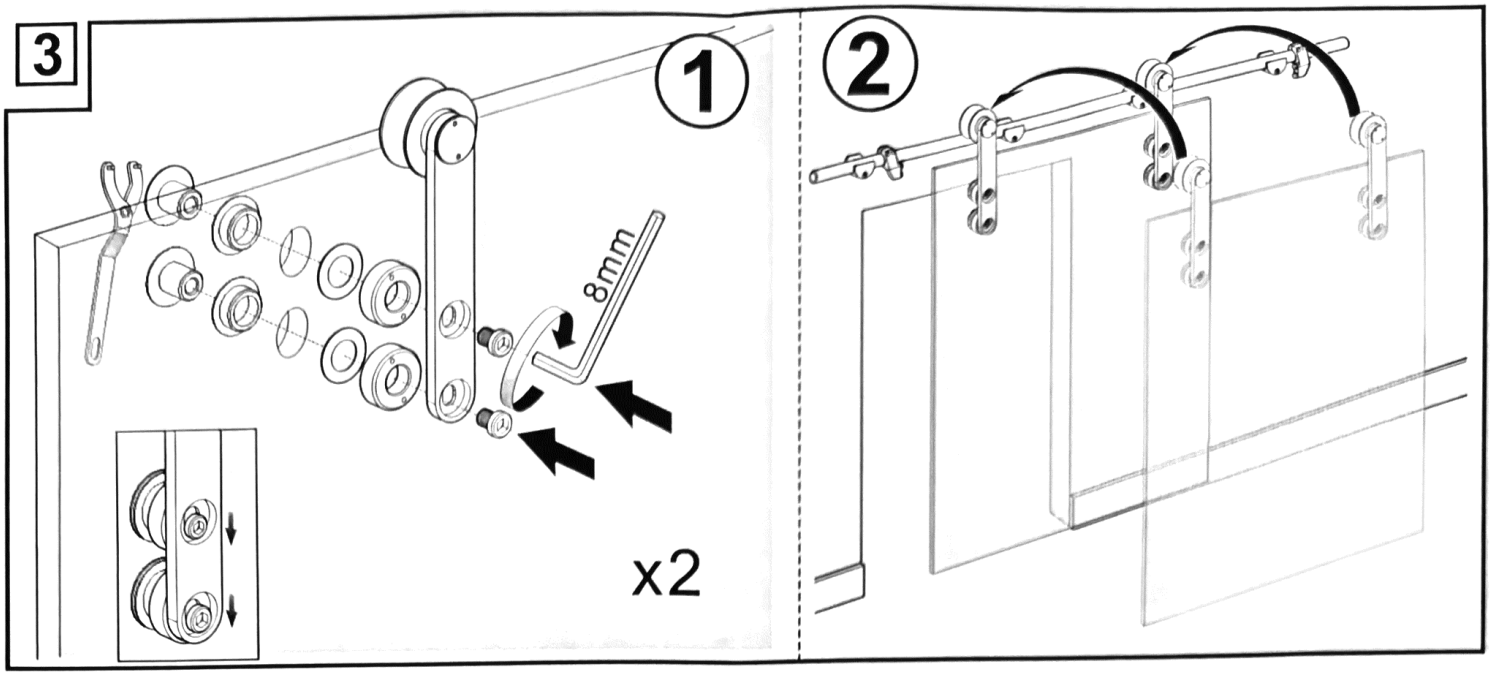
3
1
8mm
x2
2

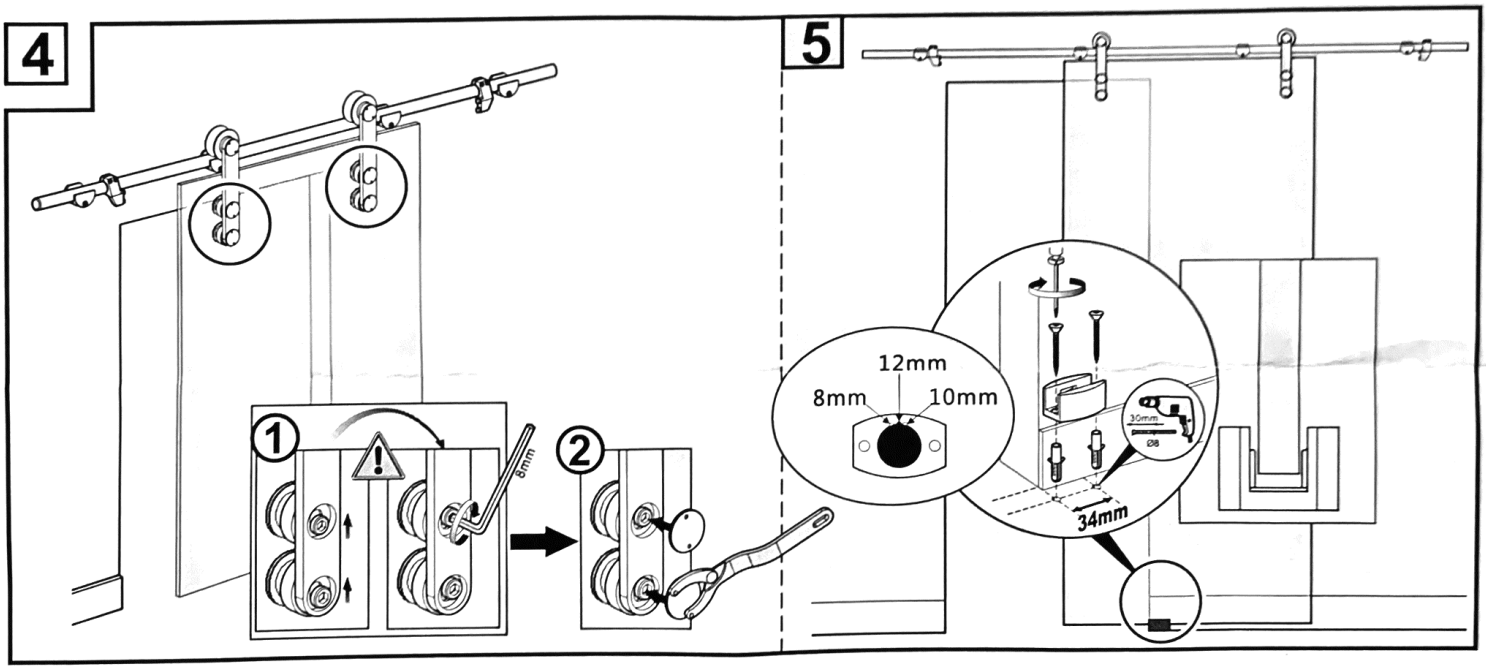
4
1
8mm
2
5
12mm
8mm
10mm
30mm
Ø8
34mm

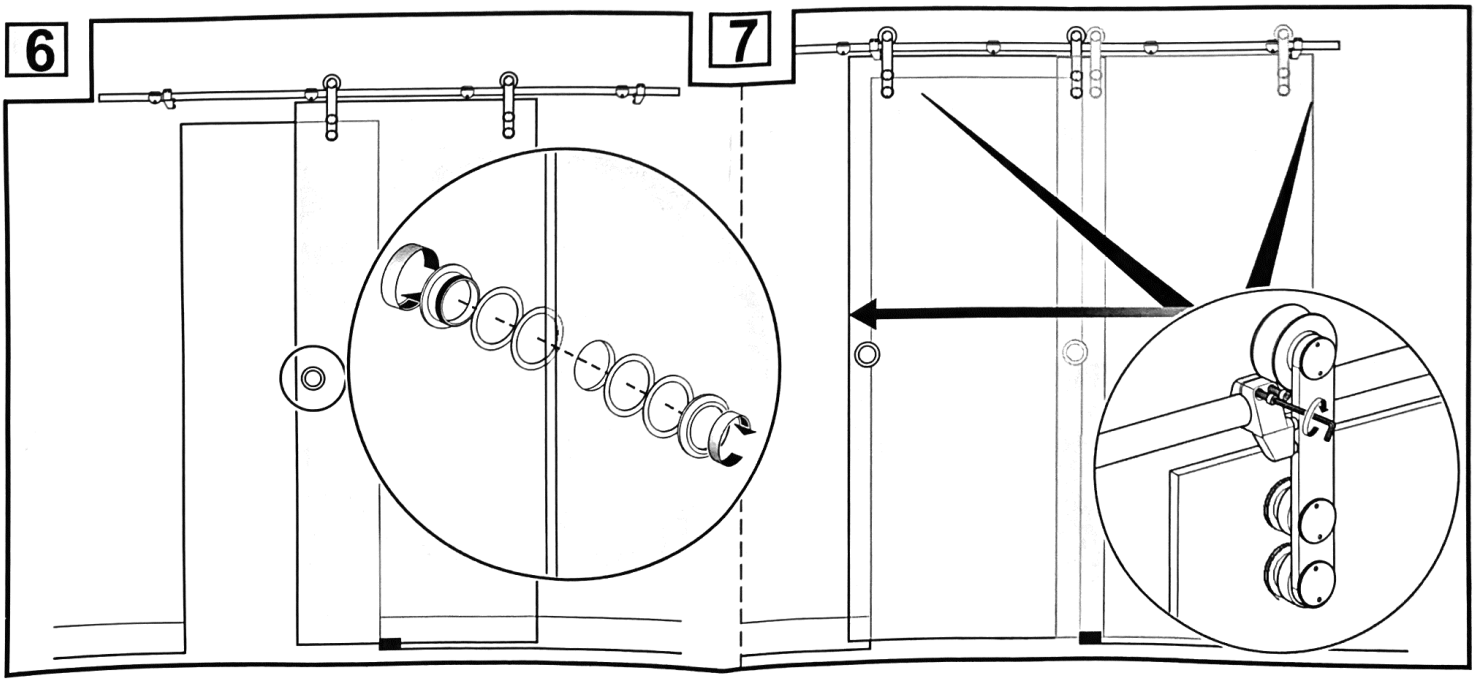
6
7